Optics & Photonics

Indzawo Optic Connect

Distribution box power outage

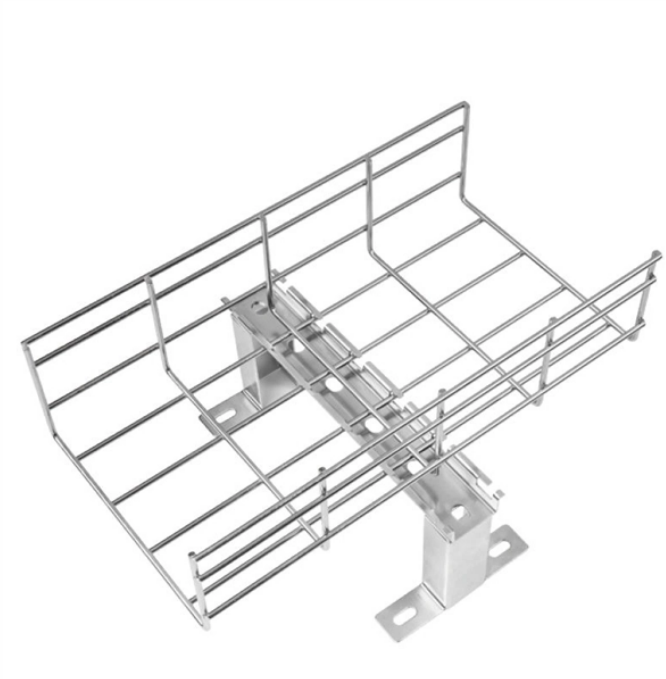

© 2026 Indzawo Optic Connect - All rights reserved

Distribution box power outage

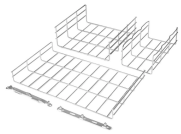	Find power outage information & resources with SCE, including real-time updates, outage maps, and recovery timelines to stay informed.
	The following services are available to the community during PSPS emergencies.
	Enter your address in this PG& E outage map to see real-time updates on how your area is affected by power shut-offs — plus see how outage areas line up with fire risk zones.
	OFF THE GRID: United States Power Outage Tracker This database aggregates power outage information from more than 1,000 companies nationwide. It will automatically update every 15 minutes.
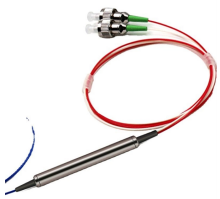	View the US power outage map to track current power outages. Find out if the power is out near you and stay prepared with Generac.

© 2026 Indzawo Optic Connect - All rights reserved

	Track real-time power outages and electrical service disruptions across the United States. Get instant updates on blackouts, power grid failures, and electrical service interruptions in your city ...
	Track power outages in California with our live outage map and real-time updates. Find affected counties and providers.
	PowerOutage tracks, records, and aggregates power outages across California.
	Track, record, and stay informed about power outages in San Jose with our dedicated platform. Access detailed and up-to-date information on electricity outages throughout the area.
	The power outages in this layer are pulled directly from the utility public power outage maps and is automatically updated every 15 minutes. This dataset represents only the most recent power outages ...

© 2026 Indzawo Optic Connect - All rights reserved

Contact Us

For more information, pricing, or custom solutions, please contact us:

Website: https://indzawo.co.za
Email: sales@indzawo.co.za
Phone: +27 71 296 8473
Address: 22 Quantum Street, Midrand, 1685, Gauteng, South Africa

This document is for informational purposes only. Specifications subject to change without notice.

© 2026 Indzawo Optic Connect - All rights reserved